EXCEL MODULAR UNIVERSAL BEAM TUBE CLAMP

Part Number	Description	Max. Slip Loading (lbs.)	Max. Tension Loading (lbs.)	Weight Galvanized (lbs.)
UBTC-6	Universal Beam Tube Clamp 4"-6"	1,000	4,000	14
UBTC-8	Universal Beam Tube Clamp 6"- 8"	1,000	3,500	14.5
UBTC-10	Universal Beam Tube Clamp 8"-10"	1,000	3,250	15
UBTC-12	Universal Beam Tube Clamp 10"-12"	1,000	3,000	15.5
UBCA	Universal Beam Clamp Attachment	—	—	1
UBVA	Universal Beam Clamp Vertical Attachment	—	—	4

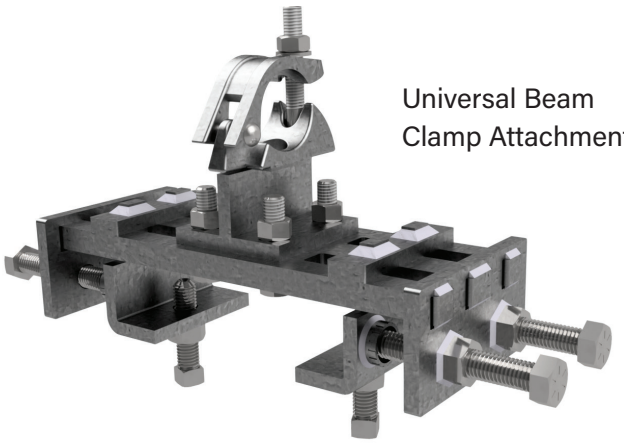

Universal Beam Clamp Attachment

Universal Beam Clamp Vertical Attachment

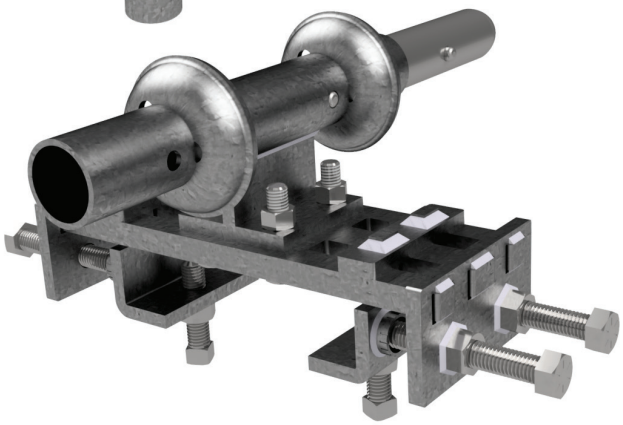

Universal beam tube clamps allow the user to design and build scaffolding in locations where there are accessible, approved I-beams. Where a scaffold was once needed to be built from the ground, it can now be built from elevated beams or columns.

BUILD NOTES:

1. The clamps attach to the flange of the I-beam and can be rotated in any direction.
2. Used in conjunction with adjustable plank bearers and standard Excel components, universal beam tube clamps can save on time and material needed to build certain scaffolds.
3. Flange width is adaptable up to a 1-inch thick flange.

Clamp bolts should have between 40 and 65 lbs. tension. Overtightening could damage the threads, bolt or item the clamp is attached to.

All material must be inspected prior to use! See inspection guidelines on page 43 of this manual.

EXCEL MODULAR UNIVERSAL BEAM TUBE CLAMP (CONT'D)

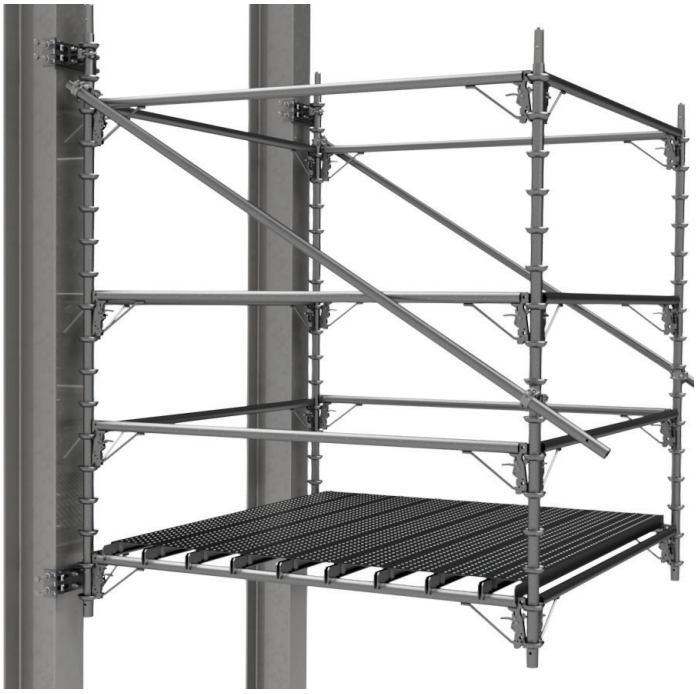

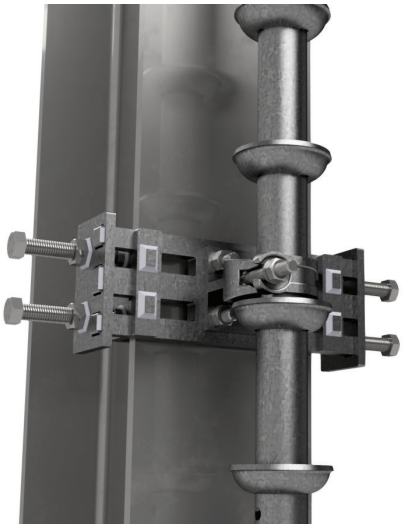

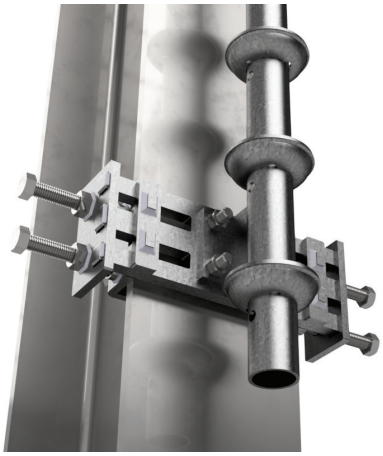

BUILD NOTES:

1. The scaffold should be designed for light-duty use and deck loading must not exceed 25 lbs./sq. ft.
2. The maximum horizontal used for the cantilever must not exceed five (5) feet.
3. **Each scaffold will require a minimum of six (6) points of attachment.**
4. Multiple clamps should be used to reduce the loading when building any scaffold. Standard beam clamps should be used as backup clamps (to prevent slip) when a scaffold is installed in high-vibration areas or for extended periods of time.

Clamp bolts should have between 40 and 65 lbs. tension. Overtightening could damage the threads, bolt or item the clamp is attached to.

ENGINEERING NOTES:

Tension loading is when the force tries to pull the clamp away from the I-Beam

Slip loading is when the force tries to slide the clamp along the beam (up or down in the picture below.)

Consult with a qualified person or engineer for loading criteria.

All material must be inspected prior to use! See inspection guidelines on page 43 of this manual.

CLAMPS